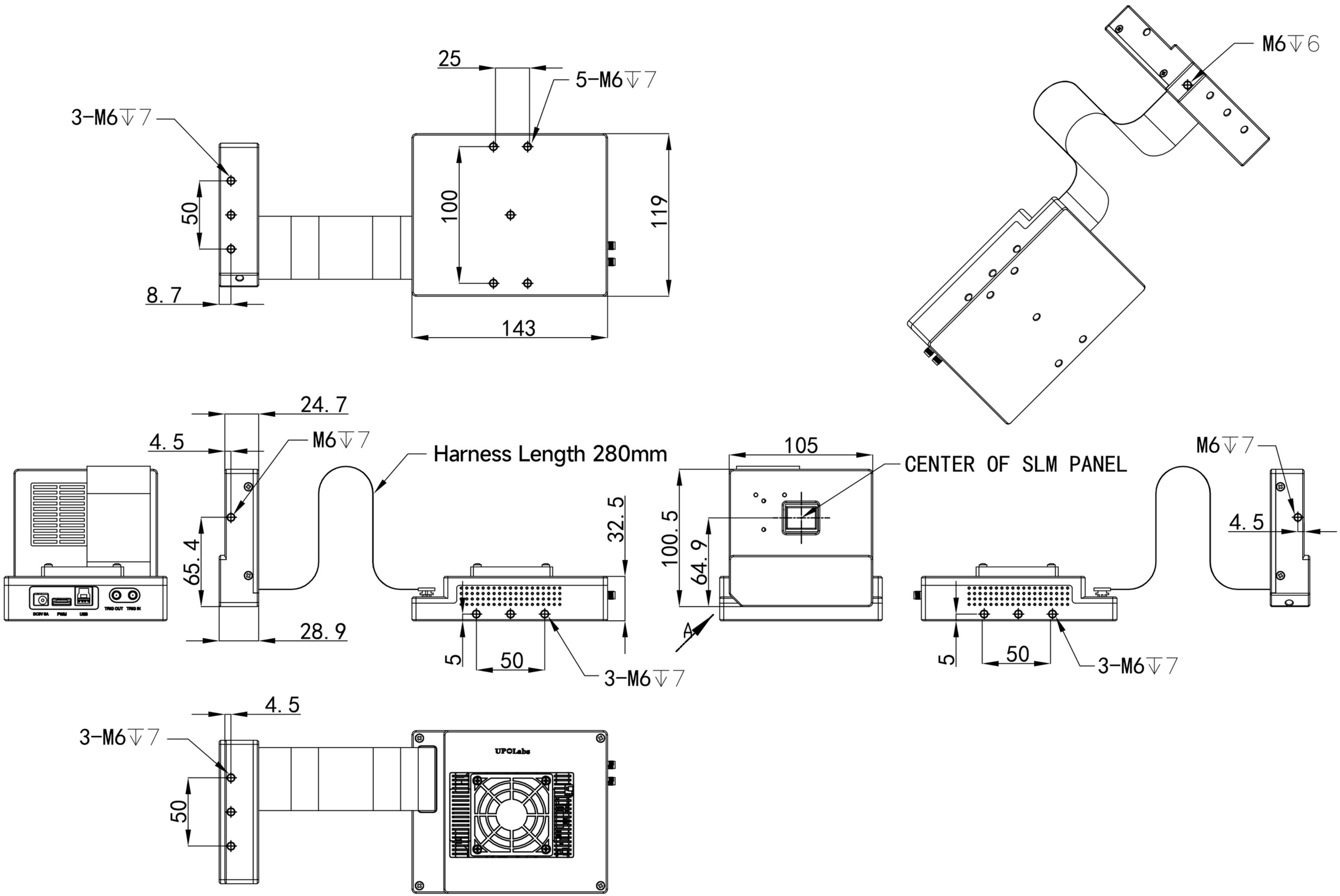

HDSLM108D65NIR