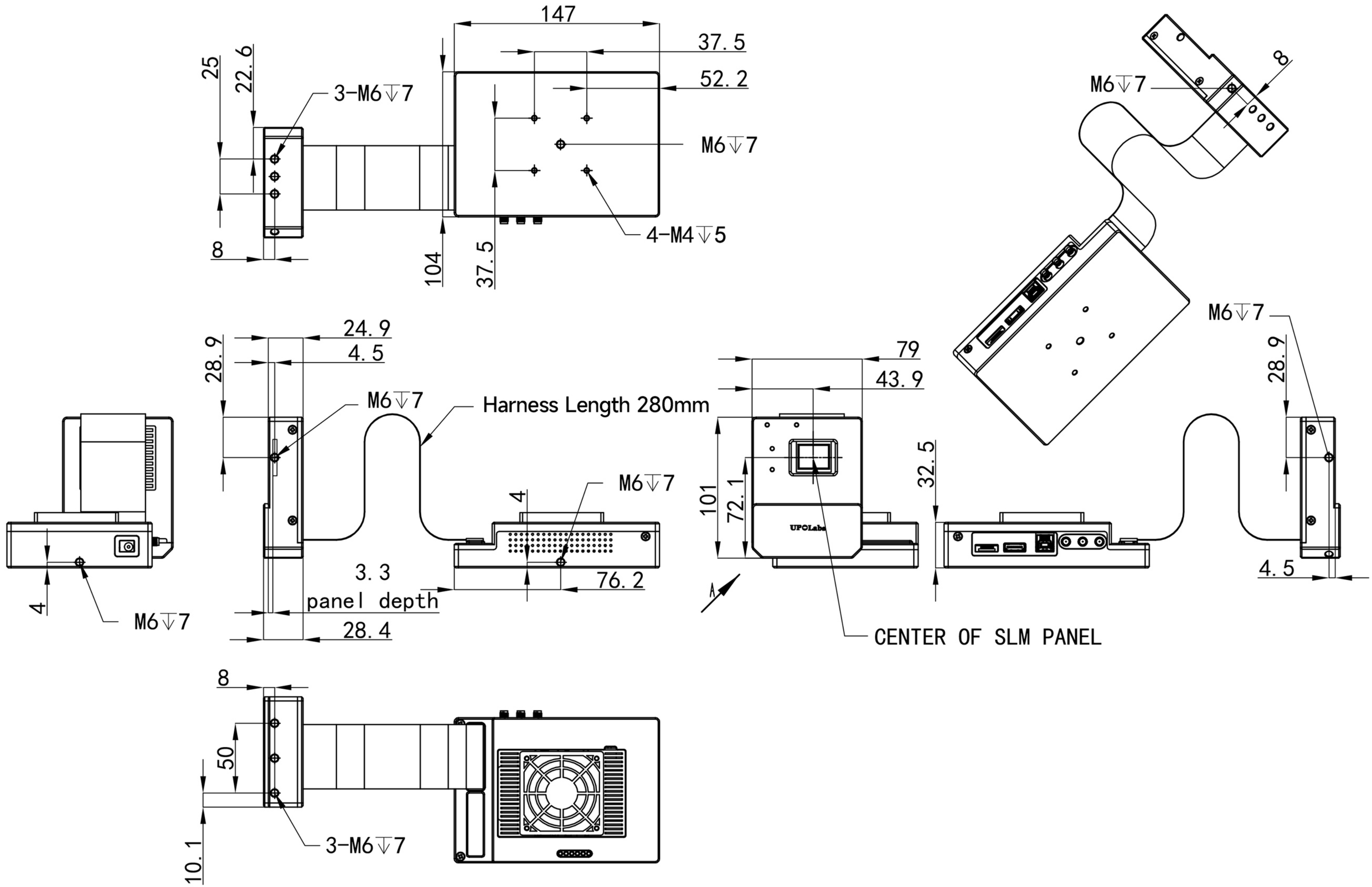

HDSLM756D65-0°