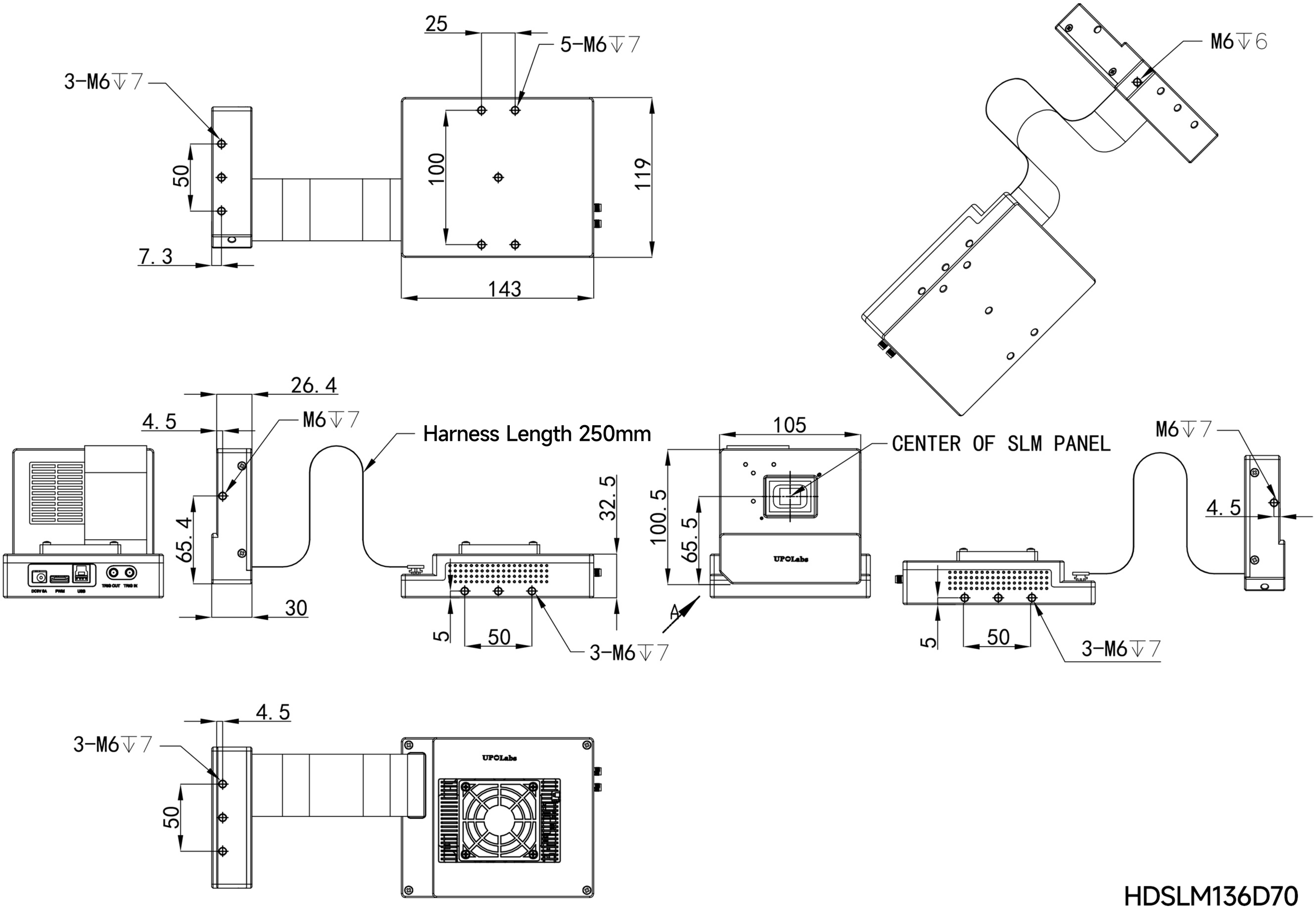

HDSLM136D70